INSTRUCTION SHEET **DRIVE KIT**

APPLICATION: S1SB-48 & S1B-54 Snowblowers.

Installation of the Output Shaft

1. Gather the items listed in the table of figure 1.
2. **Figures 1-1a:** Make sure the subframe's side plates are clean and install the two decals "DANGER" #799 (item 7) as shown on figures 1 and 1a.
3. **Figure 1:** Attach without tightening the two bearings (item 8) to the subframe (item 2) with four 3/8"NC x 1 1/2" l. hex bolts, 3/8" lockwashers and 3/8"NC hex. nuts (items 3-6-5).

   NOTE: Make sure the bearing grease fittings are positioned as shown on figure 1.
4. **Figure 1:** Temporarily remove the four bearing setscrews (item 8a) and insert the 1" x 14 7/8" lg. output shaft (item 9) in the rear bearing (item 8), 1 1/4" x 5/8" lg. square bar (item 1) and through the last bearing (item 8).
5. **Figure 1a:** Position the end of the output shaft with the longest splines (item 9) at 5 15/16" from the rear bearing (item 8) as shown on figure 1a.
6. **Figure 1:** Apply thread sealant (Loctite #243) in the bearing threaded holes (item 8) and on the threads of the four setscrews (item 8A) and tighten firmly on the bearings.

Figure 1

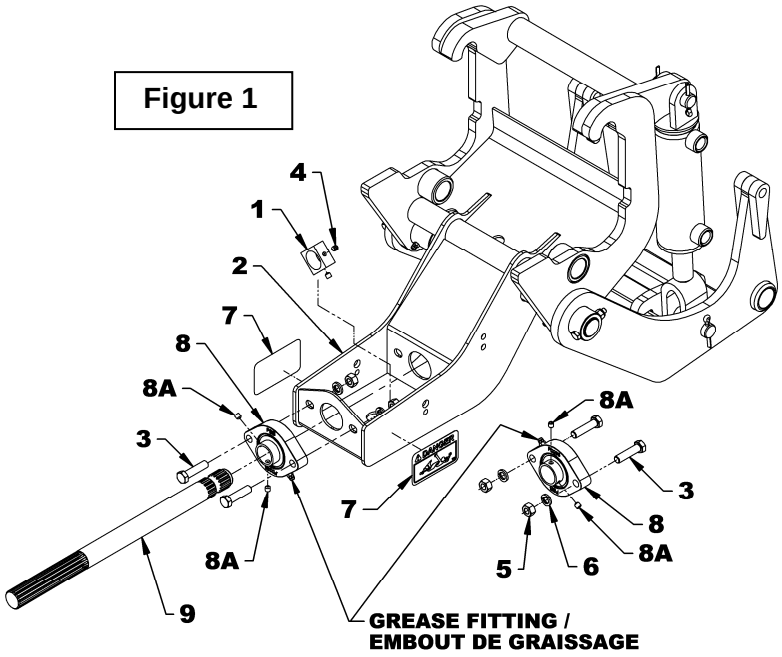

Figure 1a

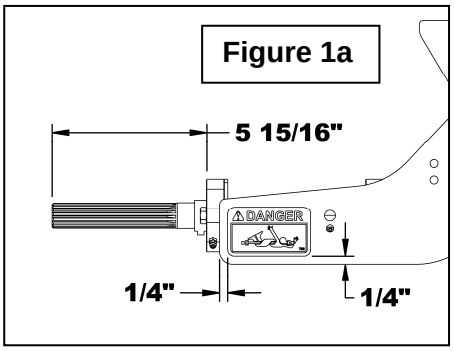

N°	DESCRIPTION	QTY
1	Square bar 1 1/4" X 5/8" lg, PTD	1
2	Subframe	1
3	Hex. bolt 3/8"NC x 1 1/2" lg.	4
4	Setscrew 1/4"NF X 1/4" lg, black	2
5	Hex. nut 3/8"NC	4
6	Lockwasher 3/8"	4
7	Decal "DANGER" #799	2
8	Bearing 1"	2
8A	Setscrew 1/4"NF X 1/4" lg, black	4
9	Output shaft 1" X 14 7/8" lg	1
10	Rotation sensor **Not included**	1
11	Hex. bolt 1/4"NC X 3/4" lg, PTD	1
12	Nylon insert nut 1/4"NC	1
13	Flat washer Ø11/32" ID X 1 1/2" OD, PTD	1
N/A	Thread sealant (Loctite #243) **not included**	---

7. **Figure 2:** Attach the rotation sensor **not included** (item 10) to the subframe (item 2) with the 1/4"NC x 3/4" lg. hex. bolt (item 11) and the 1/4"NC nylon insert nut (item 12).

8. **Figures 1 & 2:** Place the square bar (item 1) opposite the rotation sensor (item 10). Apply thread sealant (Loctite #243) in the threaded holes of the square bar (item 1) and on the setscrew threads (item 4) and tighten firmly on the square bar.

9. **Figures 2-3:** Place the 1 1/2" ext flat washer (item 13) between the rotation sensor (item 10) and the output shaft (item 9). Turn the output shaft (item 9) and adjust by laterally moving it (see figure 3) so that the space between the square bar (item 1) and the rotation sensor (item 10) is at a distance corresponding to the thickness of the 1 1/2" ext flat washer (item 13).

   IMPORTANT: Make sure there's no contact between the rotation sensor and the square bar.

10. **Figures 1-2-3:** Tighten the four 3/8"NC x 1 1/2" lg. hex. bolts (item 3) according to the Torque specification table at the end of the manual.

    NOTE: Keep the 1 1/2" ext flat washer (item 13) in case future adjustments are required.

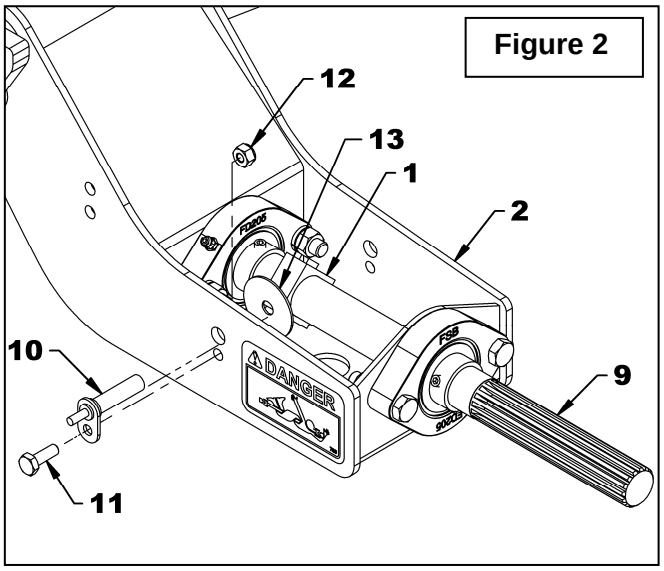

Figure 2

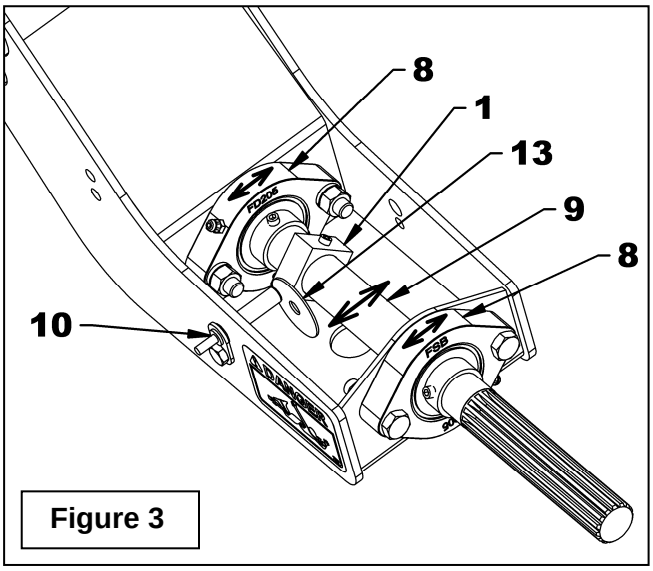

Figure 3

Installation of the Driveline

1. **Figure 4:** After completing the installation of the subframe on the tractor attach the longest yoke of the fixed driveline (item 1A) to the tractor's output shaft (item 2).
2. **Figure 4:** Disengage the locking collar (item 1) by pulling it back and push on the yoke (item 1d) to connect the driveline to the tractor PTO (item 3). Release the yoke and make sure the locking collar is back in its proper position. Pull and push on driveline to make sure it's securely locked.

⚠ **WARNING: To avoid serious injury or death: Make sure that the quick connect yoke is securely locked in place. A "click" must be heard.**

NOTE: The male part of the driveline is installed during the installation of the snowblower.

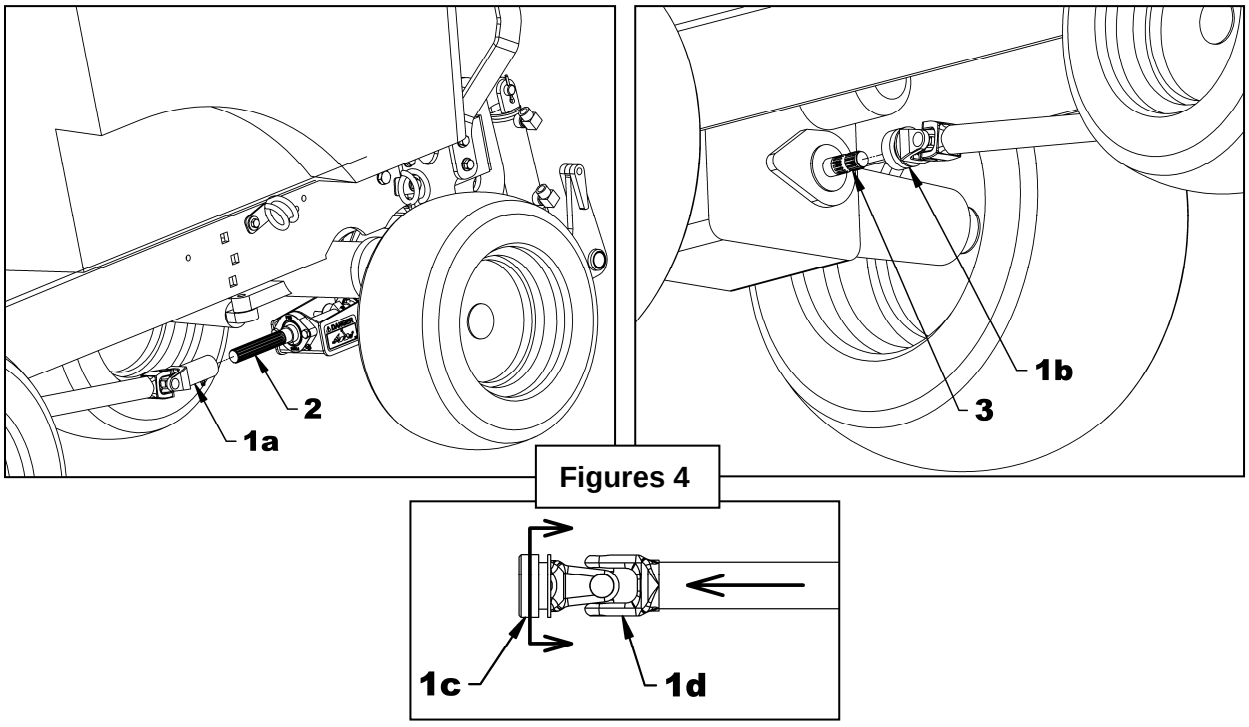

Figures 4

DRIVE KIT			
REF.	DESCRIPTION	QTY	PART #
1	Square bar 1 1/4" X 5/8" lg., PTD	1	671802
2	Hex. bolt 1/4"NC x 3/4" lg., Gr.5, PTD	1	0100003
3	Hex bolt 3/8"NC x 1 1/2" lg., Gr.5, PTD	4	0100040
4	Allen setscrew 1/4"NF x 1/4" lg., black (included in 4300054)	6	0500003
5	Hex. nut 3/8"NC PQÉ	4	0900003
6	Nylon insert nut 1/4"NC, PTD	1	1000003
7	Lockwasher 3/8", PTD	4	1200004
8	Flat washer ø11/32" ID x 1 1/2" OD – stainless steel	1	1400038
9	Decal "DANGER" #799	2	2501015
10	Flange bearing 1" with grease fittings	2	4300054
11	Driveline – male section	1	4700047
12	Fixed driveline S7E X 40 1/4"	1	4700050
13	Output shaft ø1" X 14 7/8" lg.	1	4700101
14	Grease fitting 1/4"NF (included with 4300054)	2	654106

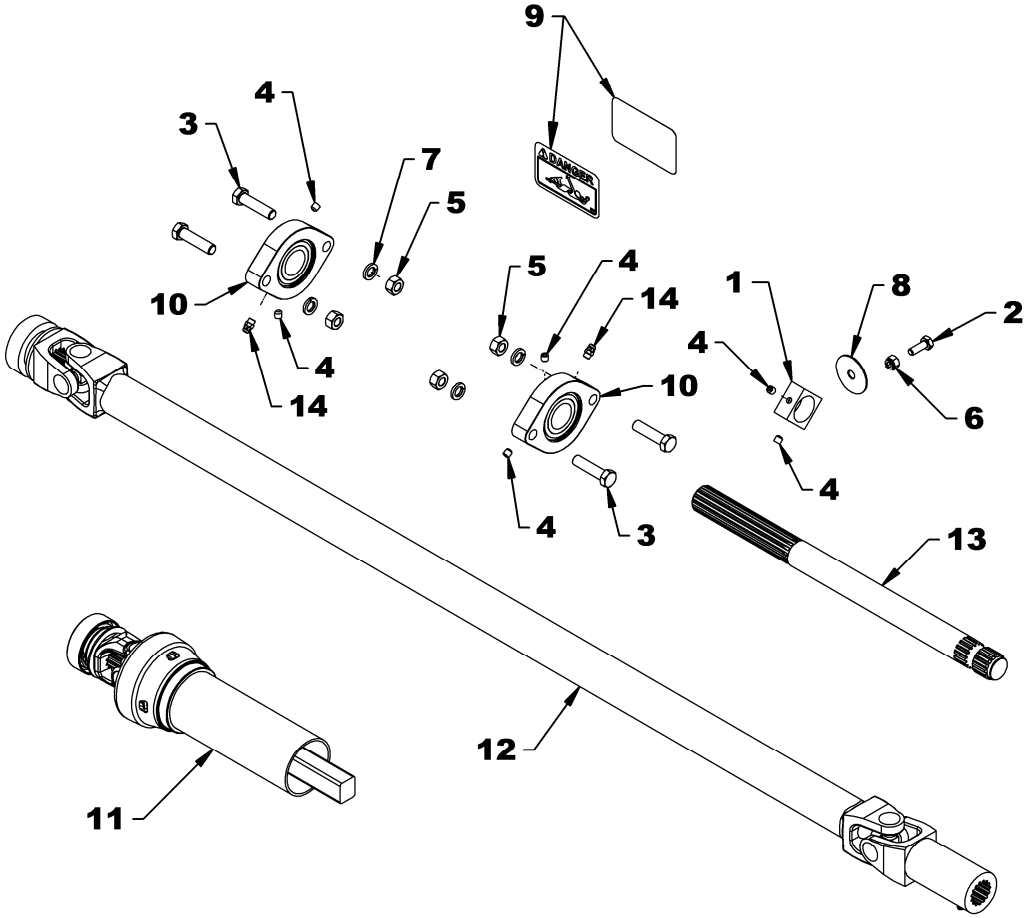

DRIVELINE 4700050			
REF.	DESCRIPTION	QTY	PART #
1	Yoke repair kit	1	658113
2	Quick connect yoke	1	665810
3	Journal cross	2	4700066
4	Yoke and shaft	1	4700077
5	Yoke	1	4700068

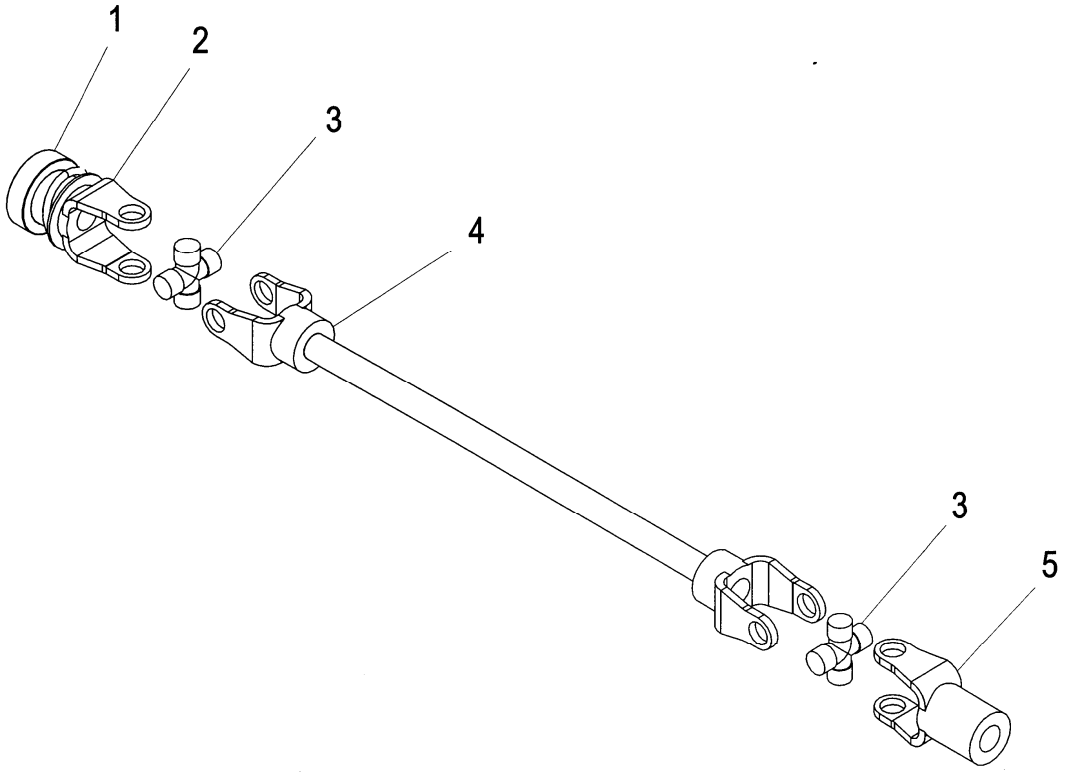

DRIVELINE 4700047			
REF.	DESCRIPTION	QTY	PART #
1	Driveline ass'y – male part	1	4700047
2	Quick disconnect yoke ass'y	1	665810
3	Spring lock yoke repair kit	1	658113
4	Universal joint kit	1	4700066
5	Yoke and male shaft ass'y	1	4700075
6	Nylon repair kit	1	661555
7	Outer shield	1	4700078

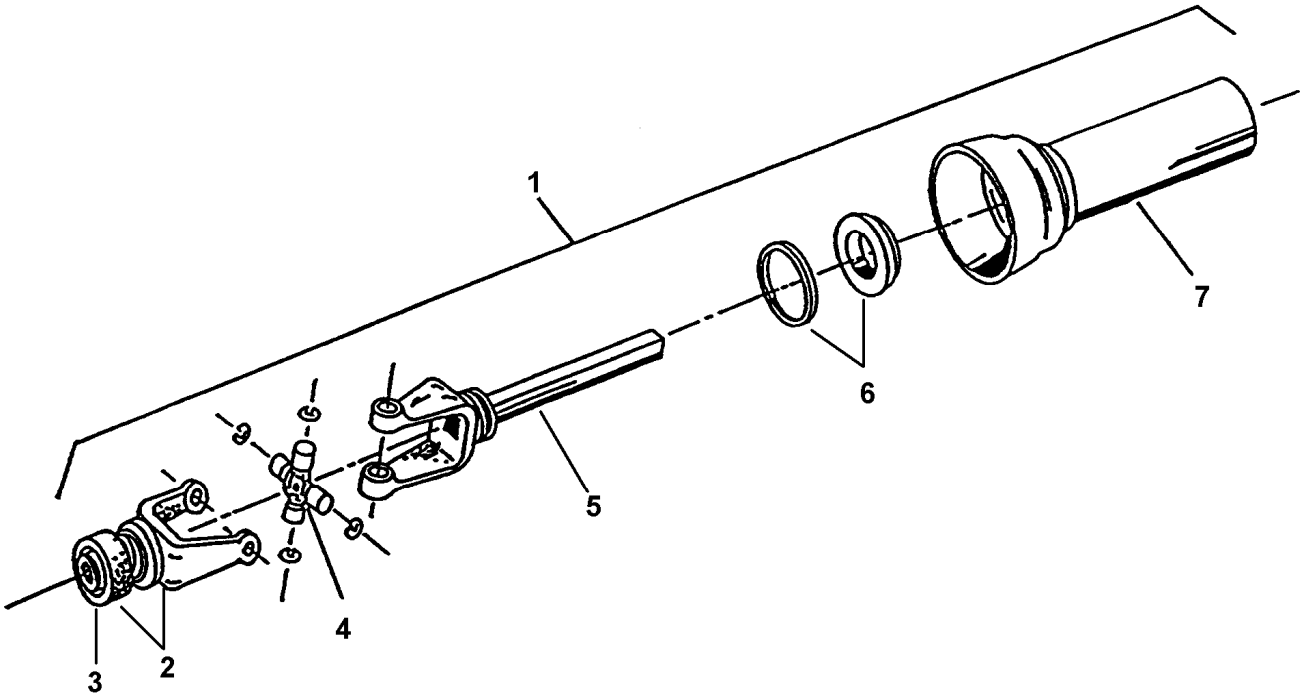

GENERAL SPECIFICATION TABLE

USE THE FOLLOWING TORQUES WHEN SPECIAL TORQUES ARE NOT GIVEN

Note:These values apply to fasteners as received from supplier dry, or when lubricated with normal engine oil. They do not apply if special graphited or moly sidulphide greases or other extreme pressure lubricants are used. These values apply to dry conditions; under lubricated conditions reduce by 25% the torques in this table.

BOLT HEAD IDENTIFICATION

INCHES Bolt Size	Grade 2		Grade 5		Grade 8	
in-tpi [1]	N-m [2]	lbs-ft [3]	N-m	lbs-ft	N-m	lbs-ft
1/4" – 20NC	7.4	5.6	11	8	16	12
1/4" – 28NF	8.5	6	13	10	18	14
5/16" – 18NC	15	11	24	17	33	25
5/16" – 24NF	17	13	26	19	37	27
3/8" – 16NC	27	20	42	31	59	44
3/8" – 24NF	31	22	47	35	67	49
7/16" – 14NC	43	32	67	49	95	70
7/16" – 20NF	49	36	75	55	105	78
1/2" – 13NC	66	49	105	76	145	105
1/2" – 20NF	75	55	115	85	165	120
9/16" – 12NC	95	70	150	110	210	155
9/16" – 18NF	105	79	165	120	235	170
5/8" – 11NC	130	97	205	150	285	210
5/8" – 18NF	150	110	230	170	325	240
3/4" – 10NC	235	170	360	265	510	375
3/4" – 16NF	260	190	405	295	570	420
7/8" – 9NC	225	165	585	430	820	605
7/8" – 14NF	250	185	640	475	905	670
1" – 8NC	340	250	875	645	1230	910
1" – 12NF	370	275	955	705	1350	995
1 1/8" – 7NC	480	355	1080	795	1750	1290
1 1/8" – 12NF	540	395	1210	890	1960	1440
1 1/4" – 7NC	680	500	1520	1120	2460	1820
1 1/4" – 12NF	750	555	1680	1240	2730	2010
1 3/8" – 6NC	890	655	1990	1470	3230	2380
1 3/8" – 12NF	1010	745	2270	1670	3680	2710
1 1/2" – 6NC	1180	870	2640	1950	4290	3160
1 1/2" – 12NF	1330	980	2970	2190	4820	3560

METRIC Bolt Size	Class 5.8		Class 8.8		Class 10.9	
mmxpitch [4]	N-m	lbs-ft	N-m	lbs-ft	N-m	lbs-ft
M 5 X 0.8	4	3	6	5	9	7
M 6 X 1	7	5	11	8	15	11
M 8 X 1.25	17	12	26	19	36	27
M 8 X 1	18	13	28	21	39	29
M10 X 1.5	33	24	52	39	72	53
M10 X 0.75	39	29	61	45	85	62
M12 X 1.75	58	42	91	67	125	93
M12 X 1.5	60	44	95	70	130	97
M12 X 1	90	66	105	77	145	105
M14 X 2	92	68	145	105	200	150
M14 X 1.5	99	73	155	115	215	160
M16 X 2	145	105	225	165	315	230
M16 X 1.5	155	115	240	180	335	245
M18 X 2.5	195	145	310	230	405	300
M18 X 1.5	220	165	350	260	485	355
M20 X 2.5	280	205	440	325	610	450
M20 X 1.5	310	230	650	480	900	665
M24 X 3	480	355	760	560	1050	780
M24 X 2	525	390	830	610	1150	845
M30 X 3.5	960	705	1510	1120	2100	1550
M30 X 2	1060	785	1680	1240	2320	1710
M36 X 3.5	1730	1270	2650	1950	3660	2700
M36 X 2	1880	1380	2960	2190	4100	3220

[1] in-tpi = nominal thread diameter in inches-threads per inch
[2] N-m = newton-meters
[3] lbs-ft= pounds-foot
[4] mm x pitch = nominal thread diameter in millimeters x thread Pitch

*Torque tolerance +0%, -15% of torquing values. Unless otherwise specified use torque values listed above